Exploded view BFC 28-60 before 14-09-'09

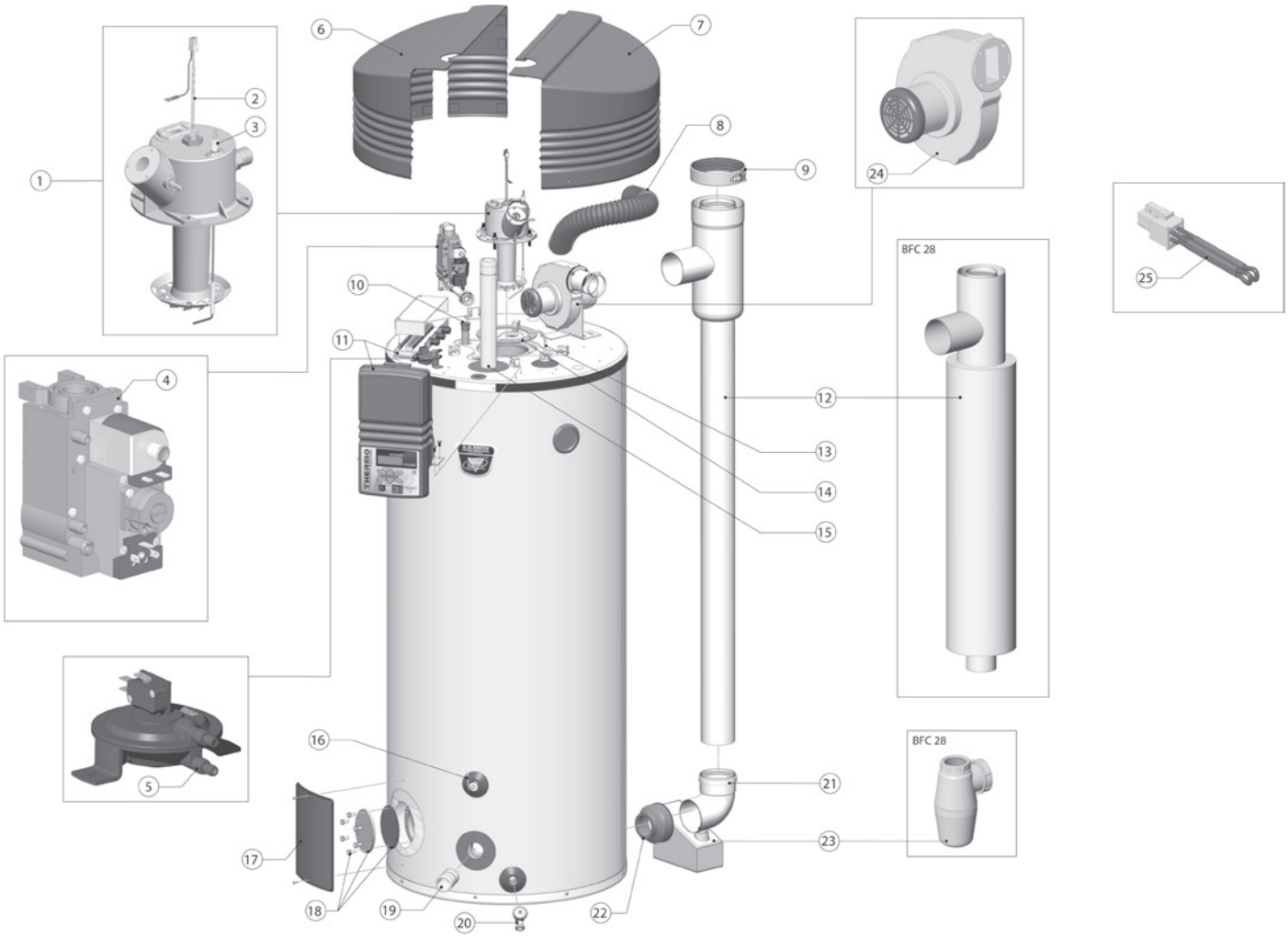

EVD-0011

Exploded view BFC 80-100 before 14-09-’09

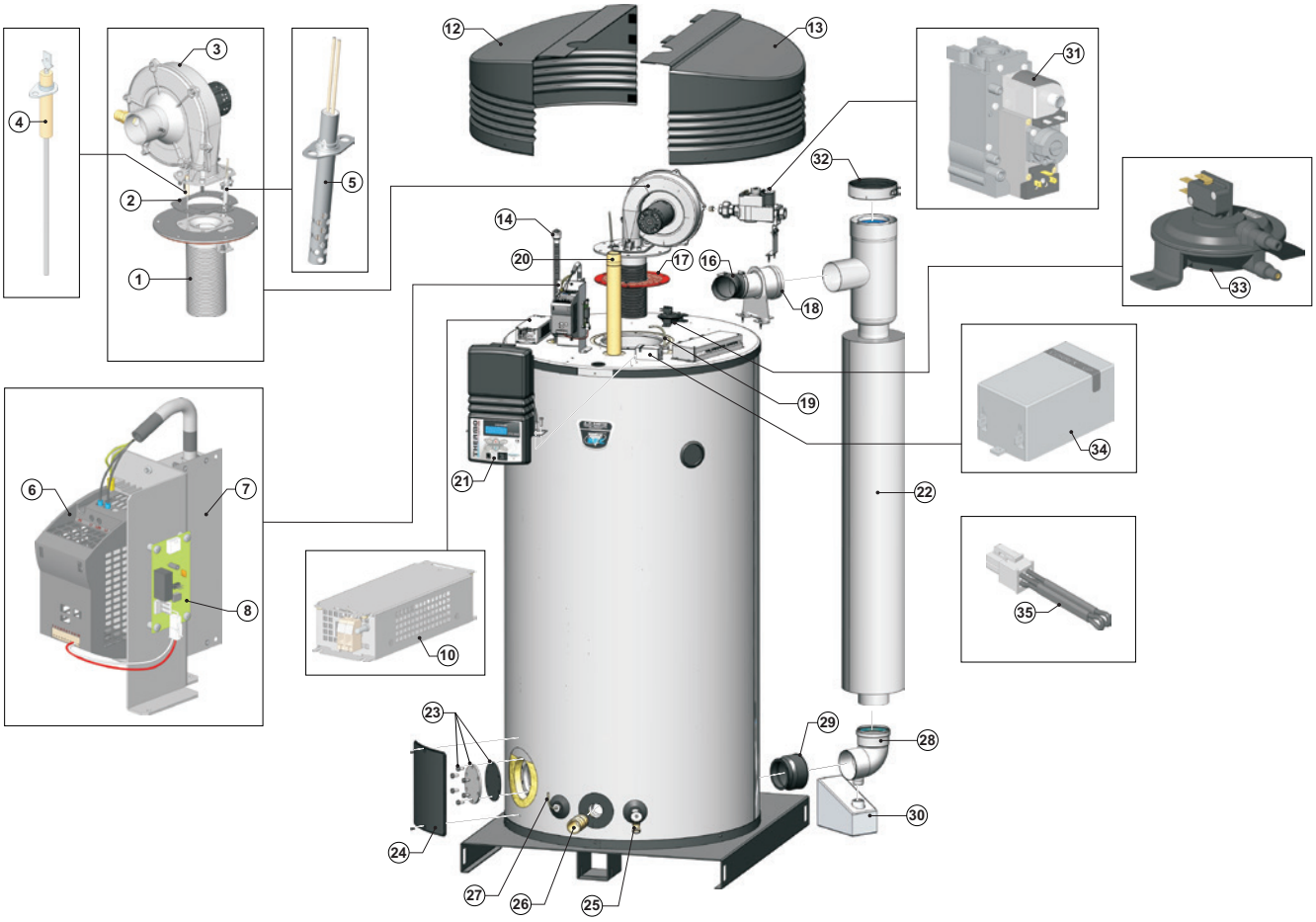

EVD-0037 R1

BFC Cyclone before 14-09-'09

BFC Cyclone parts

nr	description	date	28	30	50	60
1	Burner		n.a.	n.a.	n.a.	n.a.
2	Glow igniter service kit	tot 01-06-'05	0307315(S)	0307315(S)	0307315(S)	0307315(S)
		vanaf 01-06-'05	0304079(S)	0304079(S)	0304079(S)	0304079(S)
3	Flame probe		0192478(S)	0192478(S)	0192478(S)	0192478(S)
4	Gas control (NAT)		0300903(S)	0300903(S)	0300903(S)	0300808(S)
	Gas Control (LP)		0301099(S)	0301099(S)	0301099(S)	0301100(S)
5	Differential air pressure switch	tot 16-11-'08	0305003(S)	0305004(S)	0305005(S)	0305006(S)
		vanaf 17-11-'08	0309235(S)	0305004(S)	0305005(S)	0305006(S)
8	Flexible hose		0304035(S)	0304035(S)	0304035(S)	0304035(S)
9	Clamping strip		0305027(S)	0304199(S)	0304199(S)	0304199(S)
10	Anode		0183463039(S) (4x)	0183463050(S) (4x)	0183463050(S) (4x)	0183463050(S) (4x)
	Flexible anode		0304728(S) (4x)	0304728(S) (4x)	0304728(S) (4x)	0304728(S) (4x)
11	ThermoControl		0307936(S)	0307936(S)	0307936(S)	0307936(S)
12	Y-piece duct damper		0304987(S)	0304683(S)	0304683(S)	0304683(S)
13	Temp.sensor T2 (top tank)		0304005(S)	0304005(S)	0304005(S)	0304005(S)
14	Gasket burner/tank		0192331(S)	0192331(S)	0192331(S)	0192331(S)
15	Hot water outlet nipple		0304017(S)	0304017(S)	0304017(S)	0304017(S)
16	Temp.sensor T1 (bottom tank)		0304004(S)	0304004(S)	0304004(S)	0304004(S)
17	Cover plate cleaning opening		0039137002/24(S)	0039137002/24(S)	0039137002/24(S)	0039137002/24(S)
18	Cleaning opening kit		0305082(S)	0305082(S)	0305082(S)	0305082(S)
19	Cold water supply nipple		0070615(S)	0070615(S)	0070615(S)	0070615(S)
20	Drain valve		0026273004(S)	0026273004(S)	0026273004(S)	0026273004(S)
21	Bend		0304986(S)	0304029(S)	0304029(S)	0304029(S)
22	Adapter		0304984(S)	0192636(S)	0192636(S)	0192636(S)
23	Siphon		0304988(S)	0306181(S)	0306181(S)	0306181(S)
24	Fan		0304104(S)	0304104(S)	0304104(S)	0304104(S)
25	Flue gas thermostat		0304301(S)	0304301(S)	0304301(S)	0304301(S)

nr	description	date	before 06-04-'07 80	before 06-04-'07 100	80	100
1	Burner		0306339(S)	0306340(S)	0197315(S)	0197315(S)
2	Gasket fan/burner	before 19-01-'09	0304961(S)	0304961(S)	0308202(S)	0308202(S)
		after 19-01-'09	-	-	0309067(S)	0309067(S)
3	Fan		0194746(S)	0194746(S)	0197322(S)	0197322(S)
4	Flame probe		0194776001(S)	0194776001(S)	0194776002(S)	0194776002(S)
5	Hot surface igniter	before 01-06-'05	0307308(S)	0307301(S)	-	-
		after 01-06-'05	0306338(S)	0306338(S)	0308204(S)	0308204(S)
		before 18-01-'09	-	-	0308204(S)	0308204(S)
		after 19-01-'09	-	-	0309065(S)	0309065(S)
6	Frequency controller		0305805(S)	0305805(S)	0305805(S)	0305805(S)
7	EMC-Filter		0305806(S)	0305806(S)	0305806(S)	0305806(S)
8	PCB interface	before 31-07-'06	n.a.	n.a.	n.a.	n.a.
		after 01-08-'06	0307490(S)	0307490(S)	0307490(S)	0307490(S)
9	Automatic air bleed		0305516(S)	0305516(S)	-	-
10	Line commutation choke		-	-	0306690(S)	0306690(S)
11	Circulation pump		0305515(S)	0305515(S)	-	-
14	Power anode		0302757(S)	0302757(S)	0302757(S)	0302757(S)
15	Flexible hose (water)		0305960(S)	0305960(S)	-	-
16	Flexible hose (air)		0305504(S)	0305504(S)	0305504(S)	0305504(S)
17	Gasket burner/tank		0192331(S)	0192331(S)	0308266(S)	0308266(S)
18	Chimney adaptor		n.a.	n.a.	n.a.	n.a.
19	Temp.sensor T2 (top tank)		0304005(S)	0304005(S)	0304005(S)	0304005(S)
20	Hot water outlet nipple		0304017(S)	0304017(S)	0304017(S)	0304017(S)
21	ThermoControl		0308578(S)	0308578(S)	0308582(S)	0308582(S)
22	Y-piece duct		0304012(S)	0304012(S)	0304683(S)	0304683(S)
23	Cleaning opening kit		0305082(S)	0305082(S)	0305082(S)	0305082(S)
24	Cover plate cleaning opening		0039137002/24(S)	0039137002/24(S)	0039137002/24(S)	0039137002/24(S)
25	Drain valve		0026273004(S)	0026273004(S)	0026273004(S)	0026273004(S)
26	Cold water inlet nipple		0070615(S)	0070615(S)	0070615(S)	0070615(S)
27	Temp.sensor T1 (bottom tank)		0304004(S)	0304004(S)	0304004(S)	0304004(S)
28	Bend		0304029(S)	0304029(S)	0304029(S)	0304029(S)
29	Adapting socket		0192636(S)	0192636(S)	0308196(S)	0308196(S)
30	Siphon		0306181(S)	0306181(S)	0306181(S)	0306181(S)
31	Gas control		0306189(S)	0306189(S)	0306189(S)	0306189(S)
32	Clamping strip		0304199(S)	0304199(S)	0304199(S)	0304199(S)
33	Air pressure switch		0305490(S)	0305491(S)	0308271(S)	n.a.
34	Potentiostat		0306160(S)	0306160(S)	0306160(S)	0306160(S)
35	Flue gas sensor		0304301(S)	0304301(S)	0304301(S)	0304301(S)

Parts that are marked yellow
are parts that are used for maintenance.

BFC Cyclone before 14-09-'09

BFC Cyclone accessories

description	date	28	30	50	60	80	100
Conversion set to LP-gas	before 6-4-'07	n.a.	n.a.	n.a.	n.a.	0306806(S)	0306809(S)
Conversion set to LP-gas	after 6-4-'07	n.a.	n.a.	n.a.	n.a.	0309059(S)	0309061(S)
Conversion set to NAT-gas	before 6-4-'07	n.a.	n.a.	n.a.	n.a.	0306807(S)	0306810(S)
Conversion set to NAT-gas	after 6-4-'07	n.a.	n.a.	n.a.	n.a.	0309060(S)	0309062(S)
Inlet securtity group G1"		0070066003(S)	0070066003(S)	0070066003(S)	0070066003(S)	0070066003(S)	0070066003(S)
Isolating transformer kit		0306054(S)	0306054(S)	0306054(S)	0306054(S)	0306054(S)	0306054(S)
Gas Cock		0300719(S)	0300719(S)	0300719(S)	0300719(S)	0300719(S)	0300719(S)
Reducing Nipple Rp 1½ x 22		0309411(S)	0309411(S)	0309411(S)	0309411(S)	0309411(S)	0309411(S)
Reducing Nipple Rp 1½ x 28		0309412(S)	0309412(S)	0309412(S)	0309412(S)	0309412(S)	0309412(S)
Reducing Nipple Rp 1½ x 35		n.a.	n.a.	n.a.	n.a.	n.a.	n.a.
Potential free switch kit		0306056(S)	0306056(S)	0306056(S)	0306056(S)	0306056(S)	0306056(S)
Power anode set		0309216(S)	0309217(S)	0309217(S)	0309217(S)	0309217(S)	0309217(S)

Parts that are marked yellow
are parts that are used for maintenance.

Exploded view BFC Cyclone 28-60 from 14-09-’09 until 03-02-’13

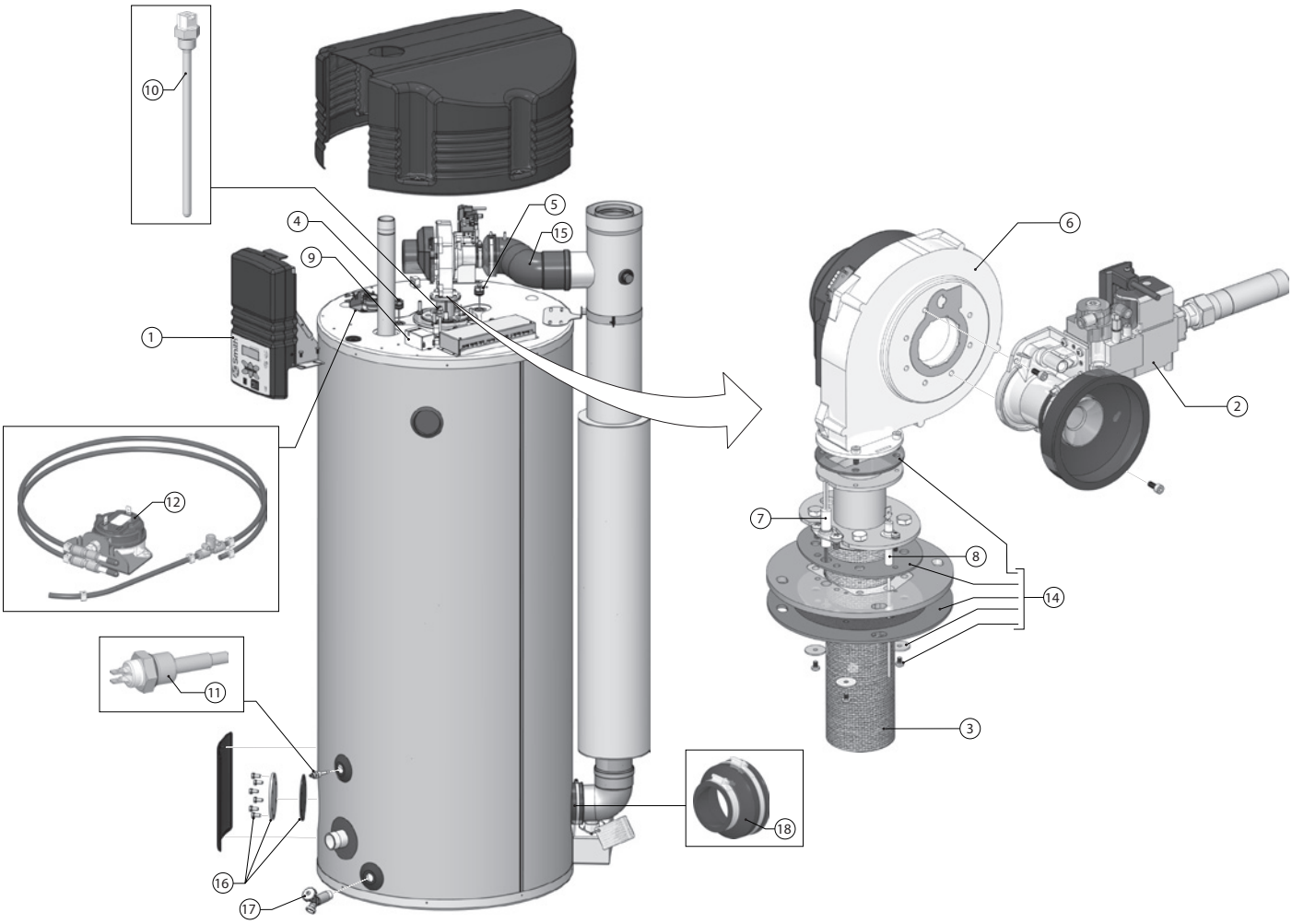

EVD-0052 R0

Exploded view BFC Cyclone 28-60 after 04-02-’13

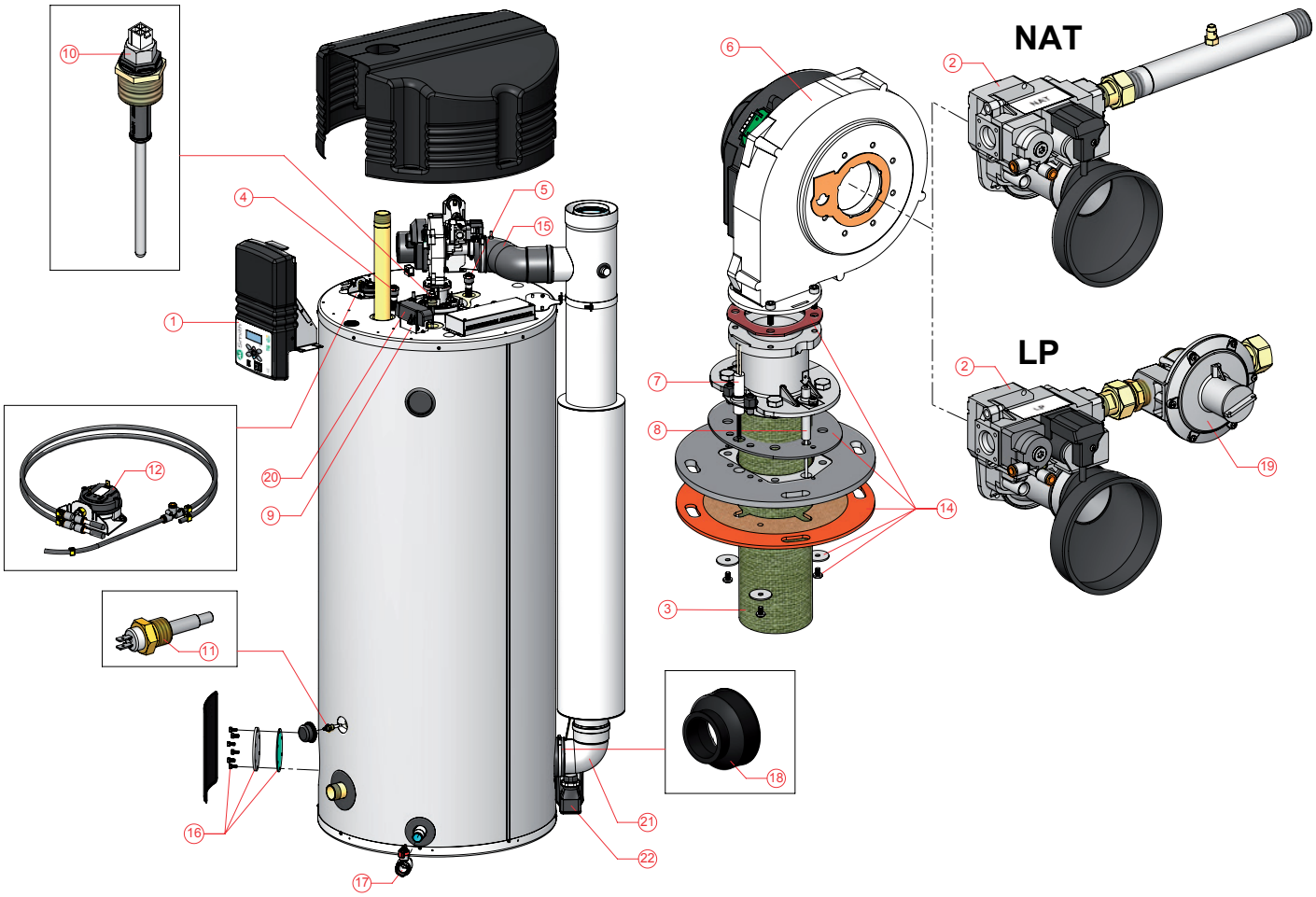

EVD-0052 R4

Exploded view BFC Cyclone 80-120 after 14-09-’09

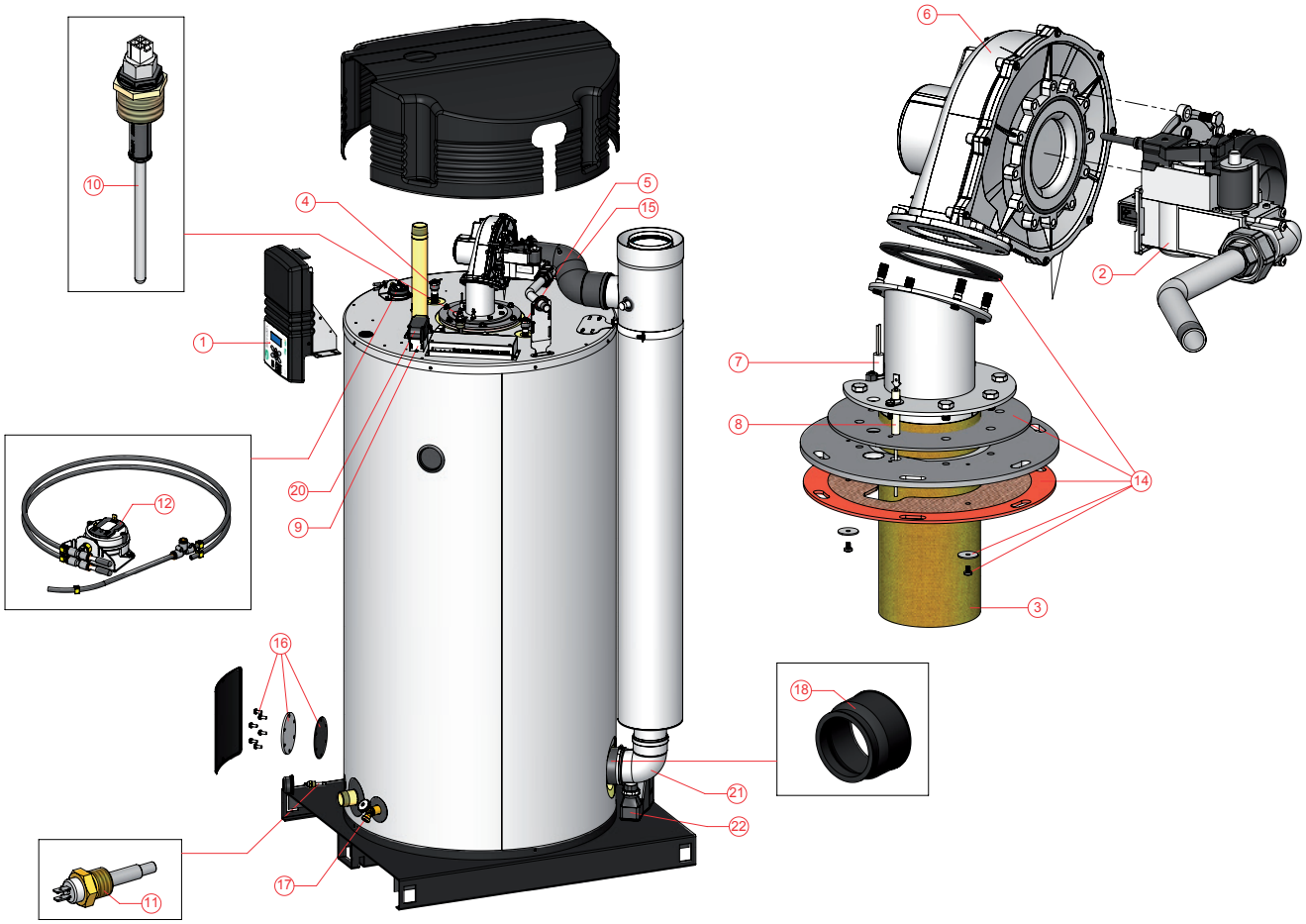

EVD-0053 R2

Please check the serial number to determine the production date:
123707002601001
year week

BFC Cyclone after 14-09-'09

BFC parts

nr	Description	date	28	30	50	60	80	100	120
1	Control	before 28-07-'13	0309362(S)	0309362(S)	0309362(S)	0309362(S)	0309362(S)	0309362(S)	0309362(S)
		after 29-07-'13	0311159(S)	0311159(S)	0311159(S)	0311159(S)	0311159(S)	0311159(S)	0311159(S)
2	Gas control (NAT)	before 03-02-'13	0310186(S)	0310186(S)	0310186(S)	0310186(S)	-	-	-
		after 04-02-'13	0310155(S)	0310155(S)	0310155(S)	0310155(S)	-	-	-
			-	-	-	-	0309167(S)	0309167(S)	0309167(S)
	Gas control (LP)	before 03-02-'13	0310188(S)	0310188(S)	0310188(S)	0310188(S)	-	-	-
		after 04-02-'13	0310157(S)	0310157(S)	0310157(S)	0310157(S)	-	-	-
			-	-	-	-	0309168(S)	0309168(S)	0309168(S)
3	Burner		0309297(S)	0309297(S)	0309297(S)	0309297(S)	0309125(S)	0309125(S)	0309125(S)
4	Power anode		-	0197709(S)	0197709(S)	0197709(S)	0197709(S)	0197709(S)	0197709(S)
5	Power anode		0197710002(S)	0197710(S)	0197710(S)	0197710(S)	0197710(S)	0197710(S)	0197710(S)
6	Fan		0309159(S)	0309159(S)	0309159(S)	0309159(S)	0309119(S)	0309119(S)	0309119(S)
7	Glow-igniter		0309232(S)	0309232(S)	0309232(S)	0309232(S)	0309232(S)	0309232(S)	0309232(S)
8	Flame probe		0310075(S)	0310075(S)	0310075(S)	0310075(S)	0310075(S)	0310075(S)	0310075(S)
9	Potentiostat		0306160(S)	0306160(S)	0306160(S)	0306160(S)	0306160(S)	0306160(S)	0306160(S)
10	Temperature sensor (top of tank)		0311295(S)	0311295(S)	0311295(S)	0311295(S)	0311295(S)	0311295(S)	0311295(S)
11	Temperature sensor (bottom of tank)		0308149(S)	0308149(S)	0308149(S)	0308149(S)	0308149(S)	0308149(S)	0308149(S)
12	Differential air pressure switch		0309169(S)	0309169(S)	0309169(S)	0309169(S)	0309331(S)	0309331(S)	0309331(S)
13	Harness		0309136(S)	0309136(S)	0309136(S)	0309136(S)	0309136(S)	0309136(S)	0309136(S)
14	Gaskets		0309608(S)	0309608(S)	0309608(S)	0309608(S)	0309609(S)	0309609(S)	0309609(S)
15	Air-inlet		0309148(S)	0309148(S)	0309148(S)	0309148(S)	0309129(S)	0309129(S)	0309129(S)
16	Cleaning opening		0305082(S)	0305082(S)	0305082(S)	0305082(S)	0305082(S)	0305082(S)	0305082(S)
17	Drain valve	before 03-10-'10	0026273004(S)	0026273004(S)	0026273004(S)	0026273004(S)	0026273004(S)	0026273004(S)	0026273004(S)
		after 04-10-'10	0308997(S)	0308997(S)	0308997(S)	0308997(S)	0026273004(S)	0026273004(S)	0026273004(S)
18	Plastic adapting socket (exit heat exchanger)		0192636(S)	0192636(S)	0192636(S)	0192636(S)	0308196(S)	0308196(S)	0308196(S)
19	Reducing valve	after 31-10-'12	0310180(S)	0310180(S)	0310180(S)	0310180(S)	-	-	-
20	Cover Potentiostat	after 04-05-'15	0311486(S)	0311486(S)	0311486(S)	0311486(S)	0311486(S)	0311486(S)	0311486(S)
21	Bend (with siphon connection)		0304029(S)	0304029(S)	0304029(S)	0304029(S)	0304029(S)	0304029(S)	0304029(S)
22	Siphon		0306181(S)	0306181(S)	0306181(S)	0306181(S)	0306181(S)	0306181(S)	0306181(S)

BFC accessories

Description	date	28	30	50	60	80	100	120
Conversion set to LP-gas	before 03-02-'13	0309540(S)	0309540(S)	0309540(S)	0309540(S)	-	-	-
	after 04-02-'13	0310936(S)	0310936(S)	0310936(S)	0310936(S)	-	-	-
		-	-	-	-	0309542(S)	0309542(S)	0309542(S)
Conversion set to NAT-gas	before 03-02-'13	0309541(S)	0309541(S)	0309541(S)	0309541(S)	-	-	-
	after 04-02-'13	0312594(S)	0312594(S)	0312594(S)	0312594(S)	-	-	-
		-	-	-	-	0312595(S)	0312595(S)	0312595(S)
Gas cock		0300719(S)	0300719(S)	0300719(S)	0300719(S)	0300719(S)	0300719(S)	0300719(S)
Inlet securtity group G1"		0070066003(S)	0070066003(S)	0070066003(S)	0070066003(S)	0070066003(S)	0070066003(S)	0070066003(S)
T&P Valve 1" NO WRAS		0099383005(S)	0099383005(S)	0099383005(S)	0099383005(S)	0099383005(S)	0099383005(S)	0099383005(S)
Reducing Nipple (for T&P)		0306713(S)	0306713(S)	0306713(S)	0306713(S)	0306713(S)	0306713(S)	0306713(S)
Reducing Nipple Rp 1½ x 22		0309411(S)	0309411(S)	0309411(S)	0309411(S)	0309411(S)	0309411(S)	0309411(S)
Reducing Nipple Rp 1½ x 28		0309412(S)	0309412(S)	0309412(S)	0309412(S)	0309412(S)	0309412(S)	0309412(S)
Reducing Nipple Rp 1½ x 35		n.a.	n.a.	n.a.	n.a.	n.a.	n.a.	n.a.
Isolation transformer		0309887(S)	0309887(S)	0309887(S)	0309887(S)	0309887(S)	0309887(S)	0309887(S)
BMS interface		0310013(S)	0310013(S)	0310013(S)	0310013(S)	0310013(S)	0310013(S)	0310013(S)

Parts that are marked yellow
are parts that are used for maintenance.